Swimmey/Onga

Swimmey/Onga		
ITEM	CODE	DESCRIPTION
1	R404293	Lid
2	R302310	Basket
3	R702208	Lid O Ring
4	R505426	50mm Union Assembly (Pk2)
5	R504605	Drain Cap & O ring
6	R303110	Body
7	R731S2380	Seal Plate 0.33hp to 1.0hp
8	R604000	Shaft Sleeve 0.33hp to 1.0hp
9	R111P0960	Shaft Sleeve O Ring 0.33hp to 1.0hp
10	R111P0970	Body O Ring
11	R111P0910	Seal Assembly 0.33hp to 1.0hp
12	R302200	Diffuser 0.33hp & 0.5hp
12	R302191	Diffuser 0.75hp & 1.0hp
13	R731SA210	Impeller 0.33hp
13	R731S3090	Impeller 0.5hp
13	R504593	Impeller 0.75hp
13	R504820	Impeller 1hp
	NPU800532	Base Kit
	NPU604020	Clacker Flap Valve
	NPU800201	Clacker Flap Valve Screw
	NPU702193	Discharge Union O Ring
	NPU505425	White Union Nut for 1.5"
	NPU505435	White Union Sleeve 1.5"
	R171P4710	Capacitor 10mF 0.33hp - 0.75hp

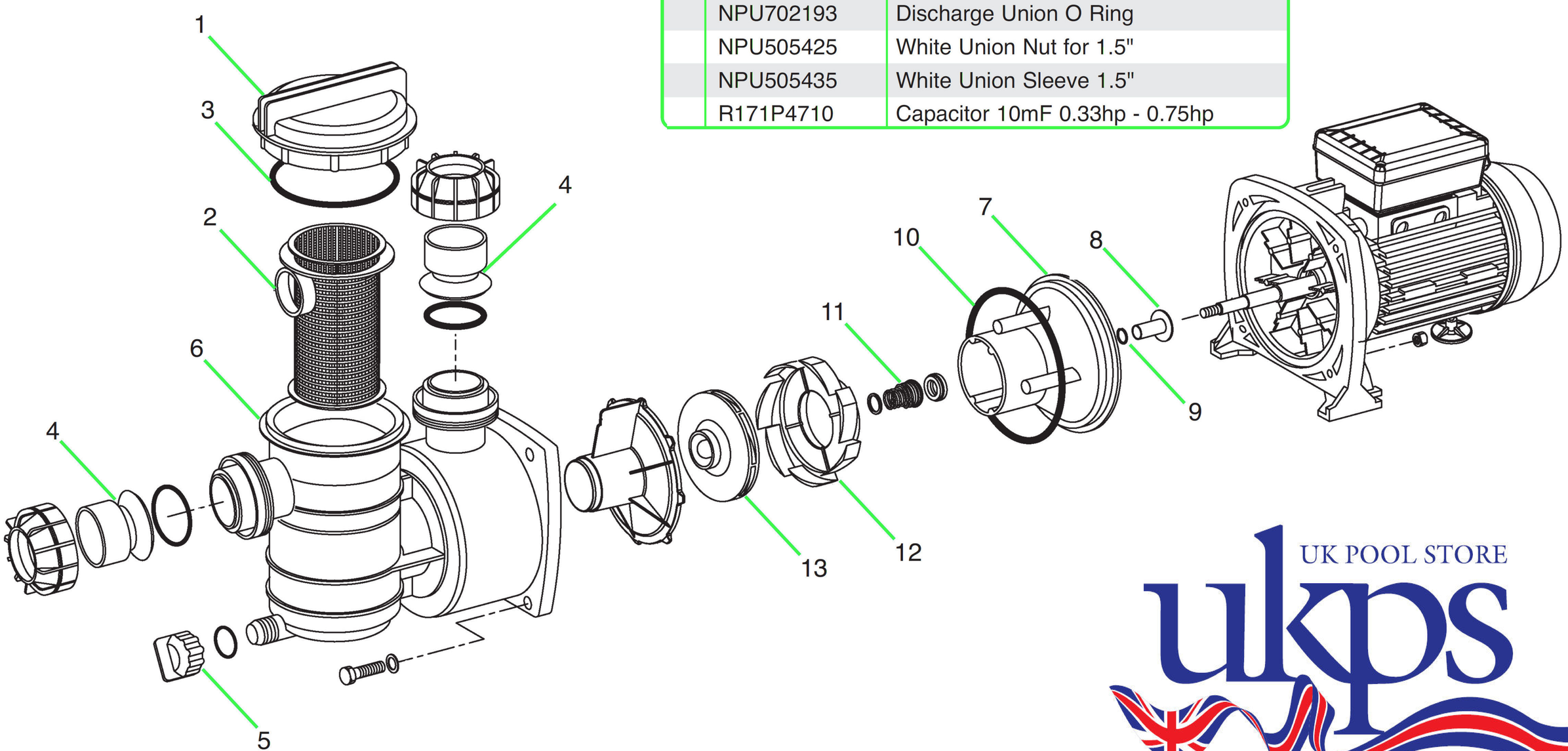

UK POOL STORE
ukps