Sta Rite 5P6R (Max E Pro)

5P6R		
ITEM/CODE		DESCRIPTION
1	RC103194PG	Seal Plate
2	R3900600	Body O Ring
3	NPU935800	Seal Assembly
4	RC105238PGM	1.5hp Impeller 1.1kW
4	RC105238PHAM	3hp Impeller 2.2kW
5	RC271PSS	Diffuser
6	RU9374	Diffuser O Ring

5P6R		
ITEM/CODE		DESCRIPTION
7	RPKG188W	Union Kit (Pk2)
8	R173070111S	Lid & Lock Assembly
9	R355051440	Lid O Ring
10	RC858P	Basket
11	RU178920P	Drain Plug (Pk2) 0.25"
12	RU30922SS	Diffuser Screw and Washer
13	NPU009362	Union O Ring

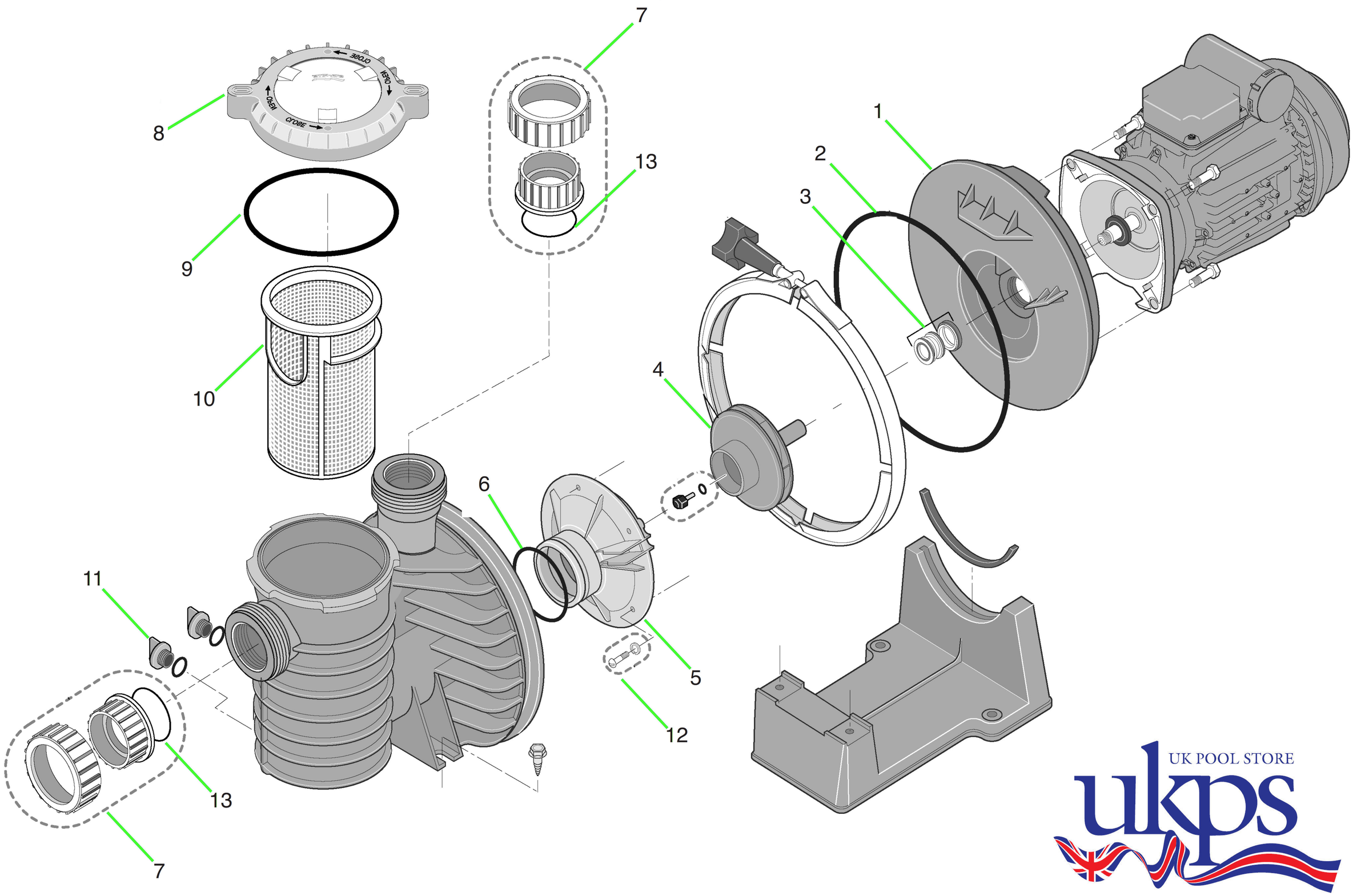

UK POOL STORE
ukps