Premium Reel System

20

27

28
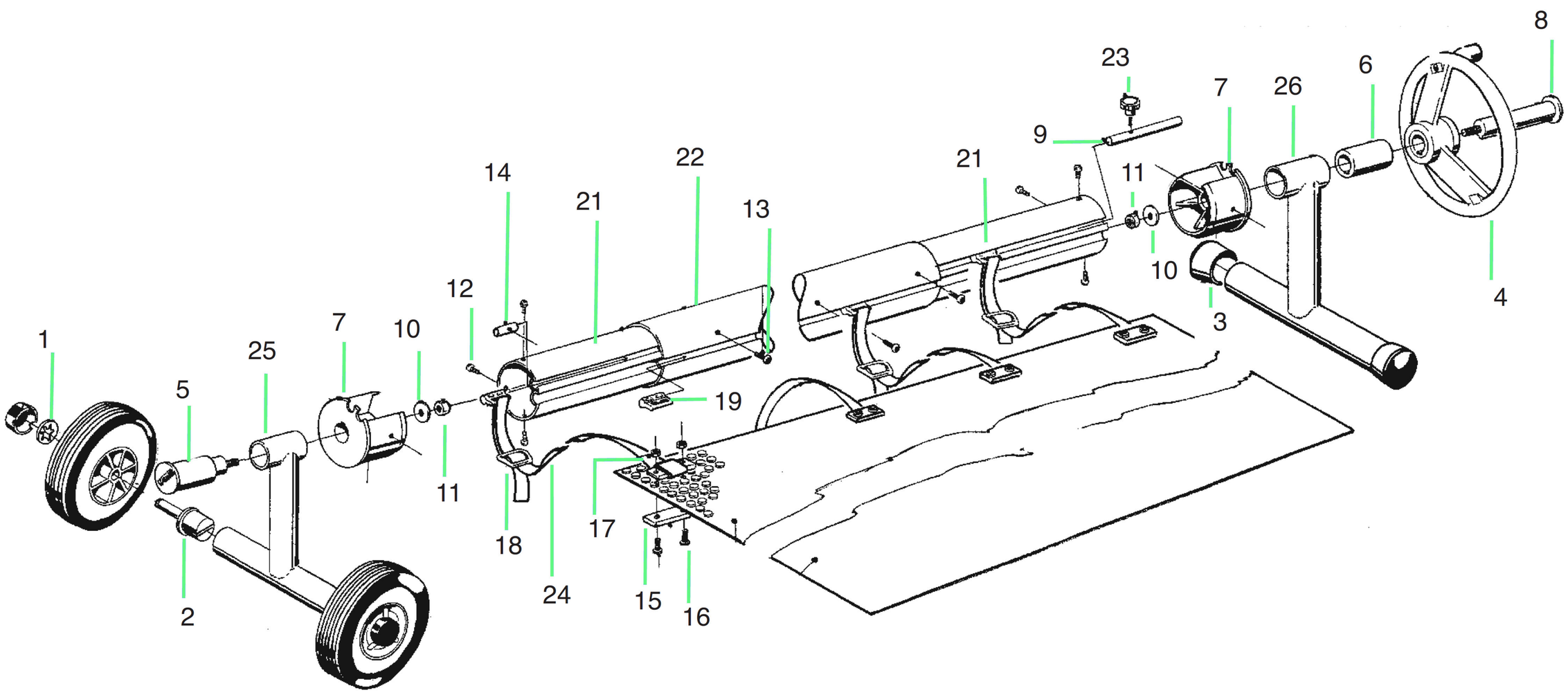
Premium Reel System			
DISCOUNT/ITEM/CODE			**DESCRIPTION**
S1	1	ERC3023	Wheel Shakeproof Washer
S1	2	ERC3043	Wheel Axle
S1	3	ERC3009	End Cap
S1	4	ERC3003	Hand Wheel
S1	5	ERC3002	Bearing Short
S1	6	ERC3004	Bearing Sleeve
S1	7	ERC3006	End Boss
S1	8	ERC3001	Bearing Long
S1	9	ERC3010	Brake Rod
S1	10	ERC3007	Washer
S1	11	ERC3008	Nut
S1	12	ERC3016	Screw
S1	13	ERC3015	Brass Insert Screw
S1	14	ERC3014	Brass Insert
S1	15	ERC3020	Plastic Strap Clamp
S1	16	ERC3022	Strap Clamp Screw
S1	17	ERC3021	Strap Clamp Nut
S1	18	ERC3018	Strap Buckle
S1	19	ERC3017	Plastic Strap Insert
S1	20	ERC30000	Strap Kit
S1	21	ERC3012	Tube Inner 1.85m
S1	22	ERC3013	Tube Outer 2.7m
S1	23	ERC3011	Brake Screw
S1	24	ERC3019	Strap
S1	25	ERC3005	End Stand Wheel Assembly Side
S1	26	ERC3026	End Stand Steering Wheel Ass. Side
S1	27	ERC3024	Above Ground End Stand Circular
S1	28	ERC3025	Above Ground End Stand T