Argonaut

Old Model

ITEM/CODE		DESCRIPTION
1	IPU10001	Lid
2	IPU10002	Lid O Ring
3	IPU434394	Basket
4	IPU10011	Body O RIng
5	81002490	Seal Assembly
6	IPU10032	Impeller J75 0.5hp
6	IPU10033	Impeller J100 0.75hp
6	IPU10034	Impeller J150 1hp
6	IPU10035	Impeller J200 1.5hp
6	IPU10050	Impeller J250 2hp

Old Model

ITEM/CODE		DESCRIPTION
7	IPU10024	Diffuser J50 0.33hp
7	IPU10025	Diffuser J75 0.75hp
7	IPU10026	Diffuser J100 0.75hp
7	IPU10027	Diffuser J150 / 200 1 - 1.5hp
7	IPU10051	Diffuser 2hp J250
	IPU10030	Lid Tool
	IPU01721	12.5uf Capacitor J50
	IPU01722	14uf Capacitor J75 and J100
	IPU01723	16uf Capacitor
	IPU01724	20uf Capacitor J150
	IPU01725	25uf Capacitor J200
	IPU10017	Water Slinger
	IPU10022	Motor Support

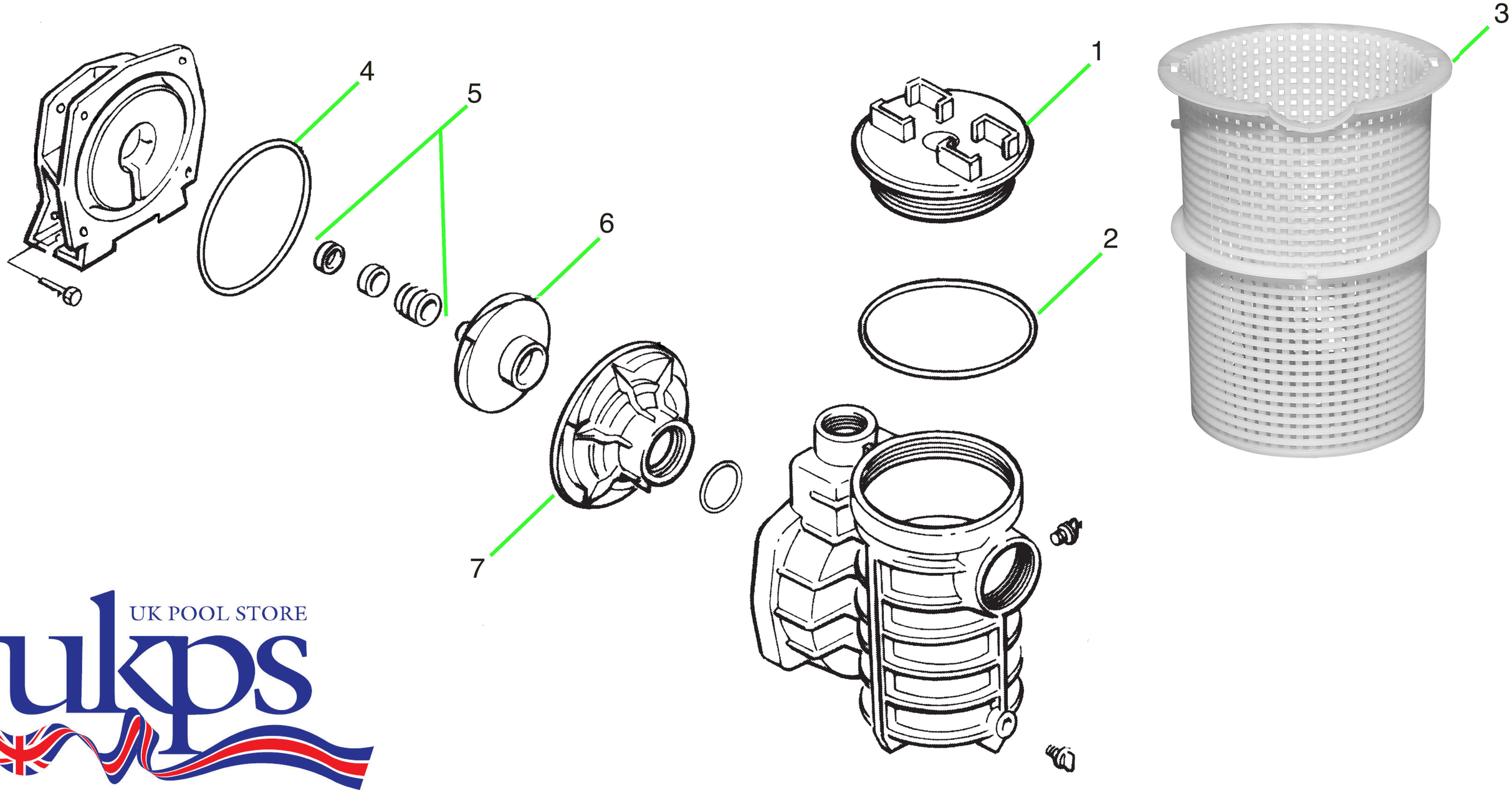

UK POOL STORE
ukps